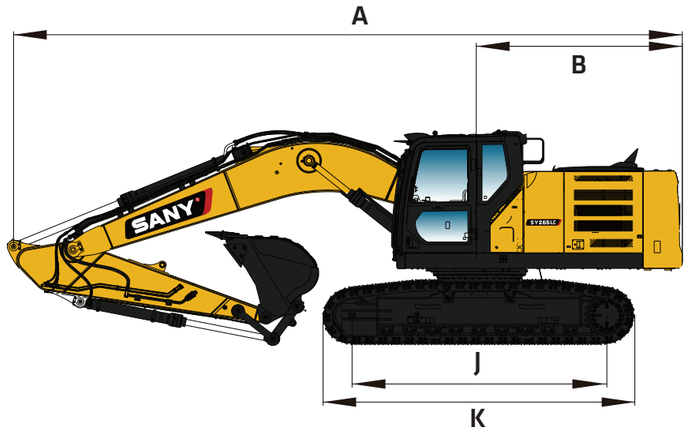

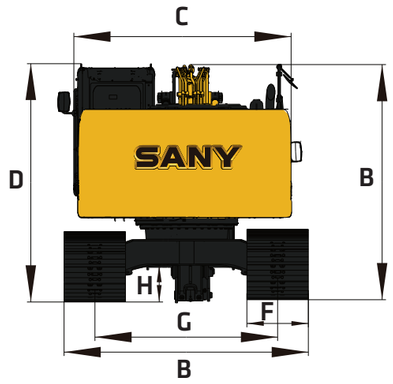

DIMENSIONS

	Boom Length	19’ 4”	
	Stick Length	9’ 8”	
A	Transport Length	33’ 7”	
B	Transport Height	11’ 2”	
C	Upper Structure Width	9’ 9”	
D	Cab Height	10’ 3”	
E	Blade Height	N/A	
F	Track Width	11’ 1”	3,390 mm
G	Track Gauge	8’ 5”	
H	Ground Clearance	1’ 6”	
I	Tail Swing Radius	10’ 3”	
J	Track Length on Ground	12’ 7”	
K	Track Length	15’ 2”	

SERVICE REFILL CAPACITIES

Auxilliary Flow	106 gpm
Auxilliary Pressure	4,931 psi
Fuel Tank Capacity	116.2 gal
DEF Tank Capacity	12.2 gal
Hydraulic Tank Capacity	87.2 gal
Engine Oil Capacity	6.6 gal
Cooling System Capacity	11.9 gal

In the interest of continual equipment development, SANY America Inc. reserves the right to change these specifications at any time without prior notification.
©2026 SANY America Inc. HEXPS26SY265LC001

INDUSTRY’S STRONGEST STANDARD WARRANTY | 5-YEAR* 5,000 HOURS

*Warranty applies to 2026 Excavator and Wheel Loader models

SANY America Inc. 318 SANY Way
Peachtree City, Georgia 30269
470.552.SANY sanyamerica.com

SY265LC

MEDIUM HYDRAULIC **EXCAVATOR**

59,525 LBS OPERATING WEIGHT
142 HP NET HORSEPOWER
21’ 11” MAX DIGGING DEPTH

SANY

TECHNICAL SPECIFICATIONS

MACHINE DATA	
Operating Weight*	59,525 lbs
Ground Pressure	5.7 psi
Engine Model	Cummins QSB6.7 Stage V
Displacement	6.7L
Net Power	142 HP
Gross Power	194 HP
Hydraulics	
Main Hydraulic Pump	2 x Variable-piston-pump with Electronic Positive Control
Operating Flow (Max)	2 x 69 gal/m
Operating Pressure (Max)	4,975 psi
Auxiliary Flow	106 gal/ 13gal
Auxiliary Pressure	4,930 psi/2,030 psi
Travel Motor	2 Speed Axial Piston Motor with Planetary Reducer and Automatic Multi-disc Brake
Travel Pressure (Max)	4,974 psi
Travel Speeds (Max)	3.7/2.3 m/h
Travel Effort (Max)	51,032 lbf
Gradability	35°
Swing Motor	Axial Piston Motor with Planetary Reducer and Automatic Holding Brake
Swing Pressure (Max)	3,989 psi
Swing Speed (Max)	11.8 rpm
Undercarriage	
Track Shoe Width	2’ 7”
Track Rollers	9
Carrier Rollers	2

WORKING SPECIFICATIONS

WORKING RANGE		
	Boom Length	19’ 4”
	Stick (Arm) Length	9’ 8”
A	Maximum Digging Height	31’ 11”
B	Maximum Dumping Height	22’
C	Maximum Digging Depth	21’ 11”
D	Maximum Vertical Wall Digging Depth	18’ 7”
E	Maximum Reach at Ground Level	33’ 6”
F	Minimum Swing Radius	12’ 5”

DIGGING PERFORMANCE	
Boom Length	19’ 4”
Stick (Arm) Length	9’ 8”
Bucket Breakout Force (ISO)	37,610 lbf
Stick (Arm) Digging Force (ISO)	29,742 lbf

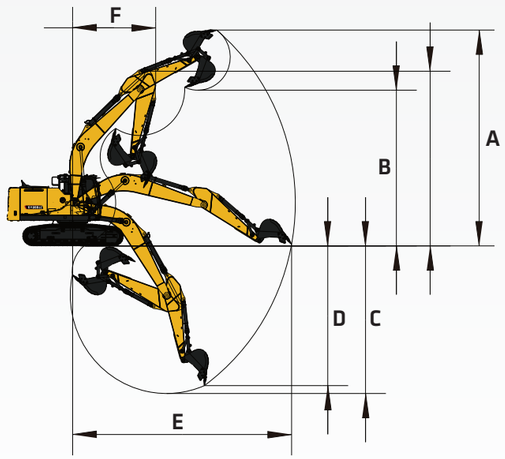

*Operating weight is for the SY265LC with no attachments, and standard stick.

SANY America Inc. reserves the right to change these specifications at any time without prior notification. ©2026 SANY America Inc. HEXPS26SY265LC001

MEDIUM HYDRAULIC EXCAVATOR SY265LC

STANDARD FEATURES

ENGINE
- 11.8 l Cummins
- Auto-idle
- Dual-element dry air filter
- Automatic belt-tension device
- Batteries 24V (2 – 12V)
- Coolant Expansion tank
- Electronic engine control
- Enclosed fan guard
- Engine coolant to –34 deg. F
- Fuel filter with water separator
- Full-flow oil filter
- Turbocharger with charge air cooler
- High flow hydraulically powered cooling fan
- 500-hour engine-oil-change interval
- 70% (35 deg.) off-level capability
- Engine air precleaner
- Severe-duty fuel filter

HYDRAULIC SYSTEM
- Spring-applied, hydraulically released automatic swing brake
- Auxiliary hydraulic-flow adjustments through monitor
- Lift power boost on joystick
- Control pattern change valve
- Auxiliary hydraulics with 1 and 2-way combination piping for high flow
- Auxiliary hydraulics with 2- way rotation piping and controls
- Auxiliary pilot and electric controls
- Quick coupler plumbing and control

UNDERCARRIAGE
- Planetary drive with axial piston motors
- Propel motor shields
- Spring-applied, hydraulically released automatic propel brake
- Track guides, front idler and 2 additional per side
- 2-speed travel selection
- Upper carrier rollers (2)
- Sealed and lubricated track chain
- Triple semi-grouser shoes, 36”
- Undercarriage frame opening guard

BOOM & STICK
- Boom 23’
- Stick, 12.8’

UPPERSTRUCTURE
- Right-hand, left-hand, and counterweight mirrors
- Vandal lock with ignition key: Cab door /Service door/ Toolbox/Cab Filter
- Debris screen in side panel
- Remote-mounted engine oil and fuel filters
- Heavy duty triangle channel frame guard
- Hydraulic removable counterweight 21,380 lbs

ATTACHMENTS
- Convenient grease points
- Centralized lubrication system
- Dirt seals on all bucket pins
- Oil-impregnated bushings
- Reinforced resin thrust plates
- Quick coupler
- Buckets: Heavy duty / Heavy-duty high capacity / Side cutter and teeth

OPERATOR’S STATION
- Adjustable independent-control positions
- AM/FM radio with USB charging and Bluetooth® connectivity
- Auto climate control/air conditioner/heater/pressurizer
- Built-in Operator’s Manual storage compartment and manual
- 12 and 24V outlets 60 watt 5 amp
- Deluxe heated air suspension cloth seat with adjustable armrests
- Heavy duty rubber floor mat
- Front windshield wiper with intermittent speeds
- Illuminated gauge: diesel exhaust fluid, engine coolant, and fuel levels
- Horn, electric
- Hour meter, electric
- Hydraulic shutoff lever, all controls
- Interior light
- Large cup holder
- Digital Power mode selection: 3 power modes
- Digital tool selection: bucket, shear, hammer, etc.
- 10” Touch screen LCD monitor
- Motion alarm with cancel switch (conforms to SAE J994)
- Power-boost switch on right joystick
- Auxiliary hydraulic control switches in right console lever
- 3” Orange retractable seat belt
- Transparent overhead hatch
- Heated or cooled food/beverage storage
- Hydraulic oil filter restriction indicator light
- Protection screens for cab front, rear, and side

ELECTRICAL
- 60-amp alternator
- Ground level electrical disconnect (lockout tag out)
- Blade-type multi-fused circuits
- Positive-terminal battery covers
- Rearview camera

LIGHTS
- Bright LED worklight package

In the interest of continual equipment development, SANY America Inc. reserves the right to change these specifications at any time without prior notification.
©2026 SANY America Inc. HEXPS26SY265LC001

LIFTING PERFORMANCE

Standard 19’ 4” Boom
Standard 9’ 8” Stick
Standard 2’ 7” Track Shoes
No Bucket

Ratings are based on ISO 10567:2007. Lift capacity does not exceed 75% of tipping load with the machine on firm, level ground or 87% of hydraulic lifting capacity.





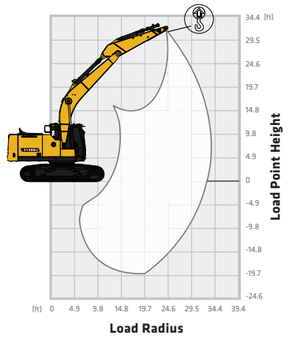

9’ 8” Stick

LOAD RADIUS	9.8 FT		14.8 FT		19.7 FT		24.6 FT		MAX REACH		
LOAD POINT HEIGHT											
24.6 ft					13,188 lbs	13,188 lbs			13,230 lbs	13,230 lbs	20' 2''
19.7 ft					13,413 lbs	13,413 lbs	12,734 lbs	12,509 lbs	12,502 lbs	12,436 lbs	24' 8''
14.8 ft					13,764 lbs	13,764 lbs	12,873 lbs	12,529 lbs	12,491 lbs	11,047 lbs	26' 7''
9.8 ft			20,857 lbs	20,857 lbs	17,322 lbs	16,542 lbs	14,826 lbs	11,874 lbs	13,497 lbs	10,189 lbs	27' 7''
4.9 ft			25,827 lbs	25,827 lbs	19,558 lbs	15,695 lbs	15,517 lbs	11,446 lbs	13,118 lbs	9,766 lbs	27' 10''
0 ft			28,200 lbs	28,200 lbs	21,038 lbs	15,124 lbs	15,197 lbs	11,133 lbs	13,481 lbs	9,982 lbs	27' 1''
-4.9 ft	24,456 lbs	24,456 lbs	28,841 lbs	28,841 lbs	21,111 lbs	15,168 lbs	15,331 lbs	11,263 lbs	14,780 lbs	10,985 lbs	25' 5''
-9.8 ft	39,040 lbs	39,040 lbs	27,657 lbs	27,657 lbs	20,592 lbs	14,756 lbs			17,488 lbs	12,937 lbs	22' 8''
-14.8 ft	33,651 lbs	33,651 lbs	23,845 lbs	23,845 lbs					19,014 lbs	17,827 lbs	18' 1''

In the interest of continual equipment development, SANY America Inc. reserves the right to change these specifications at any time without prior notification.
©2026 SANY America Inc. HEXPS26SY265LC001

sanyamerica.com ||| SY265LC