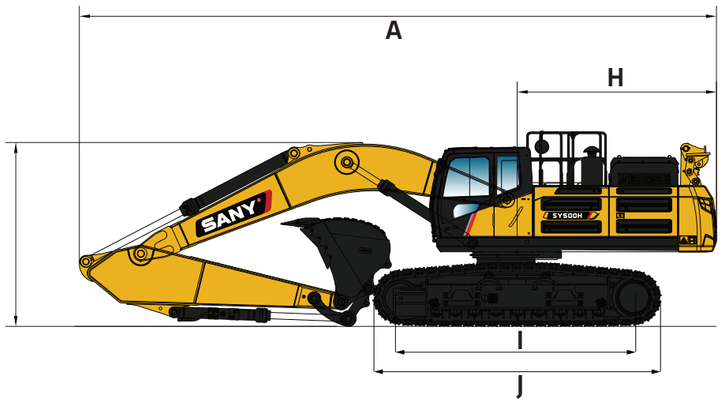

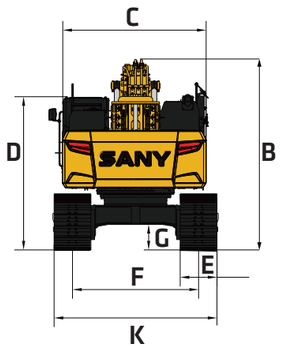

DIMENSIONS		STANDARD STICK	SHORT STICK
	Boom Length	23’	23’
	Stick (Arm) Length	12’ 9’’	11’
A	Transport Length	39’ 11’’	39’ 11’’
B	Transport Height	12’ 8’’	12’ 8’’
C	Upper Structure Width	10’ 10’’	
D	Cab Height	11’ 3’’	
E	Track Width	35’’	
F	Track Gauge	9’	
G	Ground Clearance	22’’	
H	Tail Swing Radius	12’ 8’’	
I	Track Length on Ground	14’ 6’’	
J	Track Length	17’ 11’’	
K	Transport Width	11’ 11’’	

SERVICE REFILL CAPACITIES	
Fuel Tank Capacity	179.5 gal
DEF Tank Capacity	12.33 gal
Hydraulic Tank Capacity	132 gal
Engine Oil Capacity	8.98 gal
Cooling System Capacity	13.2 gal

In the interest of continual equipment development, SANY America Inc. reserves the right to change these specifications at any time without prior notification.
©2026 SANY America Inc. HEXPS26SY500H001

INDUSTRY’S STRONGEST STANDARD WARRANTY | 5-YEAR* 5,000 HOURS

*Warranty applies to 2026 Excavator and Wheel Loader models

SANY America Inc. 318 SANY Way
Peachtree City, Georgia 30269
470.552.SANY sanyamerica.com

SY500H

LARGE HYDRAULIC **EXCAVATOR**

120,152 LBS OPERATING WEIGHT
400 HP GROSS HORSEPOWER
27’ 1” MAX DIGGING DEPTH

TECHNICAL SPECIFICATIONS

MACHINE DATA	
Operating Weight*	120,152 lbs
Bolt-on Counterweight	19,400 lbs
Ground Pressure	8.6 psi
Engine Model	Cummins QSG12 Stage V / Tier4F
Displacement	720 in³
Net Power	-
Gross Power	400 hp
Hydraulics	Positive Flow Control w/Pilot Control
Main Hydraulic Pump	Axial Piston – Variable Displacement
Operating Flow (Max)	190.2 gpm
Operating Pressure (Max)	4,975 psi
Auxiliary Flow	132 gpm
Auxiliary Pressure	4,975 psi
Travel Motor	Axial Piston with Park Brake
Travel Pressure (Max)	4,975 psi
Travel Speeds (Max)	2.1 / 3.2 mph
Travel Effort (Max)	76,101 lbf
Gradability	35°
Swing Motor	Axial Piston with Swing Brake
Swing Pressure (Max)	3,989 psi
Swing Speed (Max)	8.0 RPM
Undercarriage	Steel Track
Track Shoe Width	35”
Track Rollers	9
Carrier Rollers	2

WORKING SPECIFICATIONS

WORKING RANGE		STANDARD STICK	SHORT STICK
	Boom Length	23’	23’
	Stick (Arm) Length	12’ 9’’	11’
A	Maximum Digging Height	36’ 6’’	33’ 10’’
B	Maximum Dumping Height	25’ 8’’	25’ 1’’
C	Maximum Digging Depth	27’ 1’’	25’ 3’’
D	Maximum Vertical Wall Digging Depth	22’	20’ 7’’
E	Maximum Reach at Ground Level	41’ 2’’	39’ 6’’
F	Minimum Swing Radius	17’ 1’’	17’ 1’’

DIGGING PERFORMANCE	STANDARD STICK	SHORT STICK
Boom Length	23’	23’
Stick (Arm) Length	12’ 9’’	11’
Bucket Breakout Force (ISO)	61,822 lbf	61,822 lbf
Stick (Arm) Digging Force (ISO)	45,535 lbf	45,535 lbf

*Operating weight is for the SY500H with no attachments, and standard stick.

SANY America Inc. reserves the right to change these specifications at any time without prior notification. ©2026 SANY America Inc. HEXPS26SY500H001

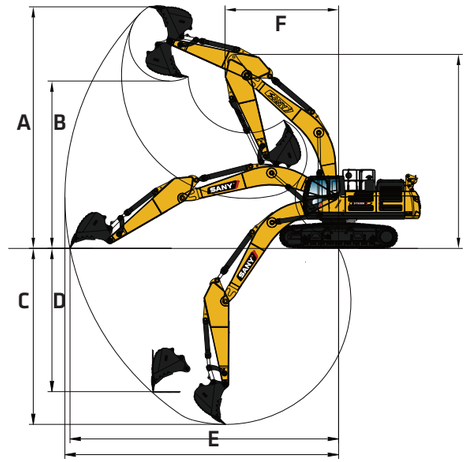

LARGE HYDRAULIC EXCAVATOR SY500H

STANDARD FEATURES

ENGINE
- 11.8 l Cummins
- Auto-idle
- Dual-element dry air filter
- Automatic belt-tension device
- Batteries 24V (2 – 12V)
- Coolant Expansion tank
- Electronic engine control
- Enclosed fan guard
- Engine coolant to –37 deg. C (–34 deg. F)
- Fuel filter with water separator
- Full-flow oil filter
- Turbocharger with charge air cooler
- High flow hydraulically powered cooling fan
- 500-hour engine-oil-change interval
- 70% (35 deg.) off-level capability
- Engine air precleaner
- Severe-duty fuel filter

HYDRAULIC SYSTEM
- Spring-applied, hydraulically released automatic swing brake
- Auxiliary hydraulic-flow adjustments through monitor
- Lift power boost on joystick
- Control pattern change valve
- Auxiliary hydraulics with 1 and 2-way combination piping for high flow
- Auxiliary hydraulics with 2- way rotation piping and controls
- Auxiliary pilot and electric controls
- Quick coupler plumbing and control

UNDERCARRIAGE
- Planetary drive with axial piston motors
- Propel motor shields
- Spring-applied, hydraulically released automatic propel brake
- Track guides, front idler and 2 additional per side
- 2-speed travel selection
- Upper carrier rollers (2)
- Sealed and lubricated track chain
- Triple semi-grouser shoes, 900 mm (36")
- Undercarriage frame opening guard

BOOM & STICK
- Boom 7 m (23')
- Stick, 3.3 m (11')

UPPERSTRUCTURE
- Right-hand, left-hand, and counterweight mirrors
- Vandal lock with ignition key: Cab door /Service door/ Toolbox/Cab Filter
- Debris screen in side panel
- Remote-mounted engine oil and fuel filters
- Heavy duty triangle channel frame guard
- Hydraulic removable counterweight 9.7 kg (21,380 lbs)

ATTACHMENTS
- Convenient grease points
- Centralized lubrication system
- Dirt seals on all bucket pins
- Oil-impregnated bushings
- Reinforced resin thrust plates
- Quick coupler
- Buckets: Heavy duty / Heavy-duty high capacity / Side cutter and teeth

OPERATOR'S STATION
- Adjustable independent-control positions (levers-to-seat, seat-to-pedals)
- AM/FM radio with USB charging and Bluetooth® connectivity
- Auto climate control/air conditioner/heater/pressurizer
- Built-in Operator's Manual storage compartment and manual
- 12 and 24V outlets 60 watt 5 amp
- Deluxe heated air suspension cloth seat with adjustable armrests
- Heavy duty rubber floor mat
- Front windshield wiper with intermittent speeds
- Illuminated gauge: diesel exhaust fluid, engine coolant, and fuel levels
- Horn, electric
- Hour meter, electric
- Hydraulic shutoff lever, all controls
- Interior light
- Large cup holder
- Digital Power mode selection: 3 power modes- low, standard, and high
- Digital tool selection: bucket, shear, hammer, etc.
- Multifunction color LCD monitor with: Diagnostic capability / Multiple-language / Maintenance tracking / Clock
- System monitoring with alarm features: Auto-idle indicator, engine air cleaner restriction indicator light, engine check, engine coolant temperature indicator light with audible alarm, engine oil pressure indicator light with audible alarm, low-alternator-charge indicator light, low-fuel indicator light, low DEF indication with audible alarm, fault code alert indicator, fuel-rate display, wiper-mode indicator, work-lights-on indicator, and work-mode indicator
- Motion alarm with cancel switch (conforms to SAE J994)
- Power-boost switch on right joystick
- Auxiliary hydraulic control switches in right console lever
- Seat belt, retractable
- Transparent overhead hatch
- Heated or cooled food/beverage storage
- Hydraulic oil filter restriction indicator light
- Protection screens for cab front, rear, and side

ELECTRICAL
- 60-amp alternator
- Ground level electrical disconnect (lockout tag out)
- Blade-type multi-fused circuits
- Positive-terminal battery covers
- Rearview & blindside camera

LIGHTS
- Work lights: High power LED - 2 mounted on boom, 2 mounted on top of cab, 1 mounted under step on right side of machine

In the interest of continual equipment development, SANY America Inc. reserves the right to change these specifications at any time without prior notification.
©2026 SANY America Inc. HEXPS26SY500H001

LIFTING PERFORMANCE

Standard 23' Boom
Standard 12' 9" Stick
Standard 35" Track Shoes
No Bucket

Ratings are based on ISO 10567:2007. Lift capacity does not exceed 75% of tipping load with the machine on firm, level ground or 87% of hydraulic lifting capacity.



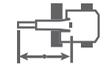

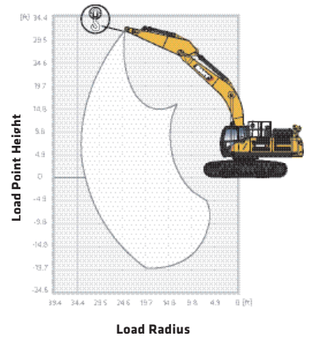

12' 9" Stick

B (HEIGHT)	5 FT		10 FT		15 FT		20 FT		25 FT		30 FT	
LOAD POINT HEIGHT												
25 ft											21,244 lbs	21,244 lbs
20 ft											21,660 lbs	21,660 lbs
15 ft							28,937 lbs	28,937 lbs	25,115 lbs	25,115 lbs	22,992 lbs	22,992 lbs
10 ft					47,461 lbs	47,461 lbs	34,396 lbs	34,396 lbs	28,179 lbs	28,179 lbs	24,729 lbs	19,797 lbs
5 ft					48,653 lbs	48,653 lbs	39,189 lbs	39,189 lbs	31,085 lbs	24,887 lbs	26,460 lbs	19,152 lbs
0 ft					49,246 lbs	49,246 lbs	42,330 lbs	33,102 lbs	33,263 lbs	24,070 lbs	27,789 lbs	18,667 lbs
-5 ft	23,600 lbs	23,600 lbs	33,073 lbs	33,073 lbs	58,931 lbs	58,931 lbs	43,541 lbs	31,900 lbs	34,306 lbs	23,646 lbs	24,015 lbs	18,435 lbs
-10 ft	38,640 lbs	38,640 lbs	50,428 lbs	50,428 lbs	56,559 lbs	56,559 lbs	42,732 lbs	32,597 lbs	33,794 lbs	23,642 lbs	27,179 lbs	18,576 lbs
-15 ft			70,748 lbs	70,748 lbs	51,332 lbs	51,332 lbs	39,376 lbs	33,179 lbs	30,714 lbs	24,151 lbs		

11' Stick

B (HEIGHT)	10 FT		15 FT		20 FT		25 FT		30 FT	
LOAD POINT HEIGHT										
25 ft										
20 ft							24,372 lbs	24,372 lbs	23,340 lbs	23,340 lbs
15 ft			41,099 lbs	41,099 lbs	31,480 lbs	31,480 lbs	26,879 lbs	26,879 lbs	19,764 lbs	24,443 lbs
10 ft			51,963 lbs	51,963 lbs	36,762 lbs	36,762 lbs	24,784 lbs	29,787 lbs	19,185 lbs	25,995 lbs
5 ft			35,841 lbs	35,841 lbs	32,132 lbs	41,063 lbs	23,861 lbs	32,419 lbs	18,667 lbs	27,498 lbs
0 ft			44,899 lbs	44,899 lbs	31,257 lbs	43,502 lbs	23,243 lbs	34,205 lbs	18,314 lbs	28,501 lbs
-5 ft	33,188 lbs	33,188 lbs	47,102 lbs	58,594 lbs	30,982 lbs	43,934 lbs	22,994 lbs	34,723 lbs	18,228 lbs	28,440 lbs
-10 ft	55,986 lbs	55,986 lbs	55,113 lbs	55,113 lbs	31,191 lbs	42,243 lbs	23,144 lbs	33,415 lbs		
-15 ft	64,589 lbs	64,589 lbs	48,510 lbs	48,510 lbs	31,921 lbs	37,547 lbs	23,931 lbs	28,206 lbs		

In the interest of continual equipment development, SANY America Inc. reserves the right to change these specifications at any time without prior notification.
©2026 SANY America Inc. HEXPS26SY500H001

sanyamerica.com ||| SY500H