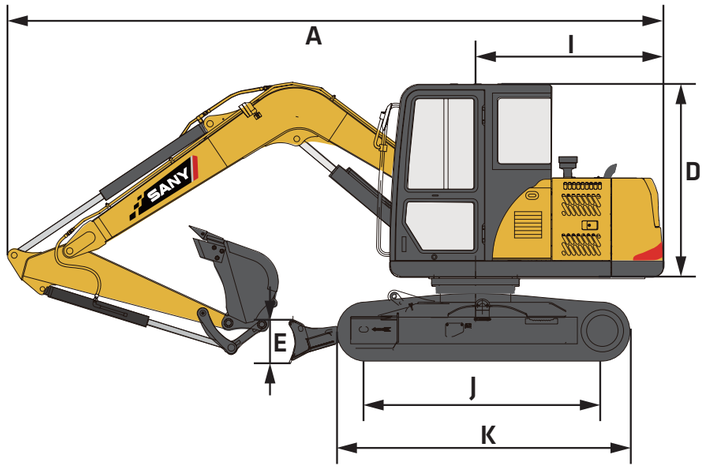

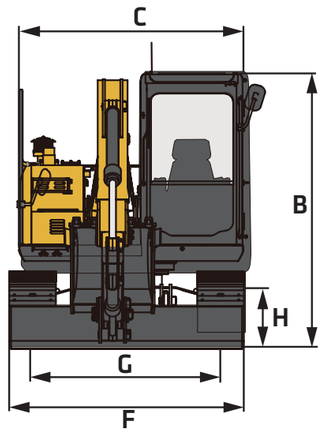

DIMENSIONS		STANDARD STICK
	Boom Length	12' 10"
	Stick (Arm) Length	6' 11"
A	Transport Length	21' 8"
B	Transport Height	9' 2"
C	Upper Structure Width	7' 1"
D	Cab Height	8' 4"
E	Blade Height	1' 6"
F	Track Width	7' 3"
G	Track Gauge	5' 9"
H	Ground Clearance	1' 2"
I	Tail Swing Radius	6' 2"
J	Track Length on Ground	7' 7"
K	Track Length	9' 7"

SERVICE REFILL CAPACITIES	
Fuel Tank Capacity	42.2 gal
Hydraulic Tank Capacity	31.7 gal
Engine Oil Capacity	2.2 gal
Cooling System Capacity	4 gal

In the interest of continual equipment development, SANY America Inc. reserves the right to change these specifications at any time without prior notification.
©2026 SANY America Inc. HEXPS26SY95C001

INDUSTRY'S STRONGEST STANDARD WARRANTY | 5-YEAR* 5,000 HOURS

*Warranty applies to 2026 Excavator and Wheel Loader models

SANY America Inc. 318 SANY Way
Peachtree City, Georgia 30269
470.552.SANY sanyamerica.com

SY95C

SMALL FIXED BOOM
EXCAVATOR

20,238 LBS OPERATING WEIGHT
72 HP GROSS HORSEPOWER
14' 2" MAX DIGGING DEPTH

SANY

TECHNICAL SPECIFICATIONS

MACHINE DATA	STANDARD STICK
Operating Weight*	20,238 lbs
Bolt-on Counterweight	–
Ground Pressure	5.6 psi
Engine Model	Yanma 4TNV98CT
Displacement	3.319 L
Net Power	/
Gross Power	72 HP
Hydraulics	
Main Hydraulic Pump	Hengli HP5V105
Operating Flow (Max)	50 gpm
Operating Pressure (Max)	3,815 psi
Auxiliary Flow	29/21 gpm
Auxiliary Pressure	3,625 psi
Travel Motor	Nabtesco GM11VA
Travel Pressure (Max)	3,815 psi
Travel Speeds (Max)	2.8/1.6 mpm
Travel Effort (Max)	16,186 lbf
Gradability	30°
Swing Motor	FSM48A
Swing Pressure (Max)	3,118 psi
Swing Speed (Max)	10.6 rpm
Undercarriage	
Track Shoe Width	1' 6"
Track Rollers	5
Carrier Rollers	1

WORKING SPECIFICATIONS

WORKING RANGE		STANDARD STICK
	Boom Length	12' 10"
	Stick (Arm) Length	6' 11"
A	Maximum Digging Height	24' 7"
B	Maximum Dumping Height	17' 10"
C	Maximum Digging Depth	14' 2"
D	Maximum Vertical Wall Digging Depth	10' 7"
E	Maximum Reach at Ground Level	23' 2"
F	Minimum Swing Radius	6' 7"

DIGGING PERFORMANCE	STANDARD STICK
Boom Length	12' 10"
Stick (Arm) Length	6' 11"
Bucket Breakout Force (ISO)	14,298 lbf
Stick (Arm) Digging Force (ISO)	9,712 lbf

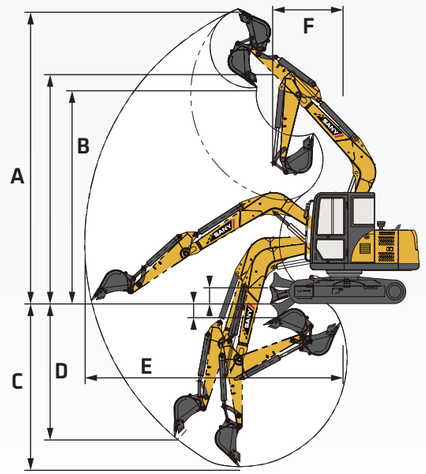

*Operating weight is for the SY95C with no attachments, and standard stick.

SANY America Inc. reserves the right to change these specifications at any time without prior notification. ©2026 SANY America Inc. HEXPS26SY95C001

SMALL FIXED BOOM EXCAVATOR SY95C

STANDARD FEATURES

ENGINE
- Yanmar 4TNV98CT
- Tier 4F / EU Stage V Ready
- Auto-idle and shutoff
- Dual-element dry air filter
- Engine air precleaner
- Coolant expansion tank
- Electronic engine control
- Fan guard
- Engine coolant to –37 deg. C (–34 deg. F)
- Full-flow oil filter
- Turbocharger
- High flow cooling fan
- 500-hour engine-oil-change interval
- No scheduled DPF maintenance for 6,000 hours
- Fuel filter and water separator

HYDRAULIC SYSTEM
- Spring-applied, hydraulically released automatic swing brake
- Load sensing hydraulic system
- Control pattern change valve
- Primary auxiliary hydraulic circuit with 1 and 2-way combination piping
- Secondary auxiliary hydraulics circuit
- Auxiliary hydraulic-flow adjustments through monitor
- Adjustable auxiliary pressure relief
- Quick coupler plumbing

UNDERCARRIAGE
- Planetary drive with axial piston motors
- Propel motor shields
- Spring-applied, hydraulically released automatic propel brake
- Track guides, front idler and 2 per side
- 2-speed travel selection through display and on dozer lever
- 5 lower track rollers each side
- 1 upper carrier roller each side
- Dozer blade with cylinder guarding
- Tie downs on track frame and dozer blade
- 450mm (18") wide steel tracks
- Undercarriage frame opening guard

UPPERSTRUCTURE
- Right-hand, left-hand, and counterweight mirrors
- Lockable cab, hood, and service doors
- Debris screen in side panel
- Remote-mounted engine oil and fuel filters
- Daily fluid level inspection visible from ground
- Rear reflectors

ATTACHMENTS
- Convenient grease points
- Dirt seals on all bucket pins

ATTACHMENTS
- Thumb bracket
- Oil-impregnated bushings
- Reinforced thrust plates

OPERATOR'S STATION
- Hydraulic pilot controls for boom, stick, swing, and travel operations
- Proportional auxiliary switches on joystick
- Travel levers with foot pedals
- AM/FM radio with Bluetooth®
- Cell phone tray
- Weight adjustable suspension cloth seat with adjustable armrests
- Retractable seatbelt
- Emergency stop switch
- Sliding front window
- Removable lower front window
- Window breaker
- ECO mode switch
- 8 tool selection modes
- Fully adjustable auxiliary flow circuits from display
- Multifunction LCD monitor with: Auto-shutoff indicator and setup, radio with Bluetooth, HVAC control, operator and owner master passwords and diagnostic capability / multiple-language
- System monitoring features: auto-idle indicator, 2-speed indicator, work-mode indicator, preheat icon, time and date, battery charge icon, throttle position, engine oil pressure alarm, DPF regeneration inhibit indicator, fuel level gauge, maintenance needed icon, failure code, standard/eco work mode icon, engine coolant temperature, coolant temp alarm, severe failure alarm, work tool mode icon, operating hours
- High performance heating, ventilation, and air conditioning system
- Operation and maintenance manual storage
- Heavy duty removable rubber floor mat
- Front windshield wiper with high and low speed
- Horn, electric
- Hour meter, electric
- Hydraulic shutoff lever, all controls
- Interior light and cup holder
- Operator E-panel
- Travel alarm with cancel switch
- Transparent overhead hatch with retractable sun shade

ELECTRICAL
- 12V electrical system
- Maintenance free battery
- Ground level battery disconnect
- Easy access fuse panel
- Terminal battery covers
- 80-amp alternator
- 12V power outlet

LIGHTS
- Work lights: 3 mounted on top of cab, 1 mounted on boom, magnetic beacon

In the interest of continual equipment development, SANY America Inc. reserves the right to change these specifications at any time without prior notification.
©2026 SANY America Inc. HEXPS26SY95C001

LIFTING PERFORMANCE

Standard 12' 10" Boom
Standard 6' 11" Stick
Standard 1' 6" Track Shoes
No Bucket

Ratings are based on ISO 10567:2007. Lift capacity does not exceed 75% of tipping load with the machine on firm, level ground or 87% of hydraulic lifting capacity.





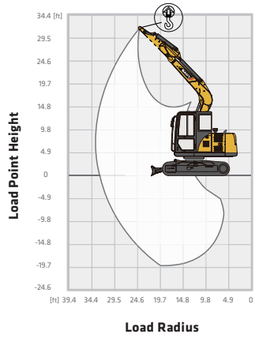

Blade Up

B (HEIGHT)	9.8 FT		13.1 FT		16.4 FT		MAX.	
LOAD POINT HEIGHT								
16.4 ft	–	–	*5,512 lbs	5,071 lbs	–	–	*4,299 lbs	*4,299 lbs
13.1 ft	–	–	*5,622 lbs	5,071 lbs	–	–	*3,968 lbs	3,527 lbs
9.8 ft	*7,606 lbs	*7,606 lbs	5,952 lbs	4,850 lbs	*2,646 lbs	*2,646 lbs	3,748 lbs	2,976 lbs
6.6 ft	*8,267 lbs	7,385 lbs	5,732 lbs	4,630 lbs	*3,086 lbs	*3,086 lbs	3,527 lbs	2,866 lbs
3.3 ft	8,708 lbs	6,945 lbs	5,622 lbs	4,409 lbs	*3,748 lbs	3,197 lbs	3,417 lbs	2,756 lbs
0 ft	8,488 lbs	6,834 lbs	5,512 lbs	4,299 lbs	3,968 lbs	3,086 lbs	3,527 lbs	2,756 lbs
-3.3 ft	8,488 lbs	6,724 lbs	5,401 lbs	4,299 lbs	–	–	3,858 lbs	3,086 lbs
-6.6 ft	*7,496 lbs	6,834 lbs	*4,189 lbs	*4,189 lbs	–	–	4,740 lbs	3,748 lbs
-9.8 ft	*6,504 lbs	*6,504 lbs	-	-	–	–	*5,401 lbs	*5,401 lbs

Blade Down

B (HEIGHT)	3.3 FT		9.8 FT		16.4 FT		MAX.	
LOAD POINT HEIGHT								
16.4 ft	–	–	*5,512 lbs	5,071 lbs	–	–	*4,299 lbs	*4,299 lbs
13.1 ft	–	–	*5,622 lbs	5,071 lbs	–	–	*3,968 lbs	3,527 lbs
9.8 ft	*7,606 lbs	*7,606 lbs	*6,173 lbs	4,850 lbs	*2,646 lbs	*2,646 lbs	*3,968 lbs	2,976 lbs
6.6 ft	*8,267 lbs	7,385 lbs	*6,173 lbs	4,630 lbs	*3,086 lbs	*3,086 lbs	*4,079 lbs	2,756 lbs
3.3 ft	*9,370 lbs	6,945 lbs	*6,834 lbs	4,409 lbs	*3,748 lbs	3,197 lbs	*4,299 lbs	2,756 lbs
0 ft	*9,259 lbs	6,834 lbs	*7,275 lbs	4,299 lbs	4,409 lbs	3,086 lbs	*4,850 lbs	2,756 lbs
-3.3 ft	*9,590 lbs	6,724 lbs	*7,275 lbs	4,299 lbs	–	–	*5,401 lbs	3,086 lbs
-6.6 ft	*7,496 lbs	6,834 lbs	*4,189 lbs	*4,189 lbs	–	–	*5,512 lbs	3,748 lbs
-9.8 ft	*6,504 lbs	*6,504 lbs	-	-	–	–	*5,401 lbs	*5,401 lbs

In the interest of continual equipment development, SANY America Inc. reserves the right to change these specifications at any time without prior notification.
©2026 SANY America Inc. HEXPS26SY95C001

sanyamerica.com ||| SY95C