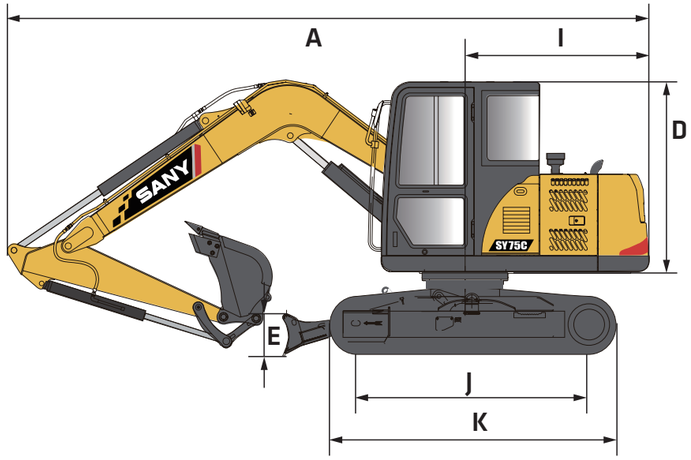

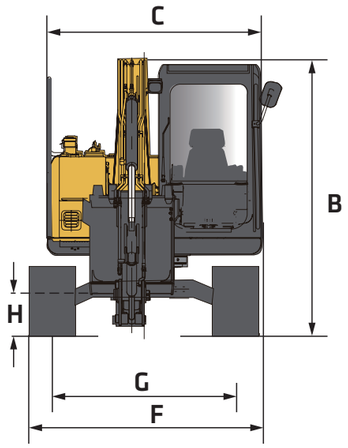

DIMENSIONS		STANDARD STICK
	Boom Length	12' 2"
	Stick (Arm) Length	6' 9"
A	Transport Length	20' 1"
B	Transport Height	8' 11"
C	Upper Structure Width	6' 8"
D	Cab Height	8' 11"
E	Blade Height	1' 4"
F	Track Width	7' 7"
G	Track Gauge	5' 9"
H	Ground Clearance	1' 3"
I	Tail Swing Radius	5' 11"
J	Track Length on Ground	7' 2"
K	Track Length	9' 3"

SERVICE REFILL CAPACITIES	
Fuel Tank Capacity	39.6 gal
Hydraulic Tank Capacity	31.7 gal
Engine Oil Capacity	2.7 gal
Cooling System Capacity	4 gal

In the interest of continual equipment development, SANY America Inc. reserves the right to change these specifications at any time without prior notification.
©2026 SANY America Inc. HEXPS26SY75C001

INDUSTRY'S STRONGEST STANDARD WARRANTY | 5-YEAR* 5,000 HOURS

*Warranty applies to 2026 Excavator and Wheel Loader models

SANY America Inc. 318 SANY Way
Peachtree City, Georgia 30269
470.552.SANY sanyamerica.com

SY75C

SMALL FIXED BOOM
EXCAVATOR

16,050 LBS OPERATING WEIGHT
56.9 HP GROSS HORSEPOWER
14' 7" MAX DIGGING DEPTH

SANY

TECHNICAL SPECIFICATIONS

MACHINE DATA	STANDARD STICK
Operating Weight*	16,050 lbs
Bolt-on Counterweight	–
Ground Pressure	4.8 psi
Engine Model	4TN98C
Displacement	202.5 in³
Net Power	54 HP @ 2,000 rpm
Gross Power	56.9 HP @ 2,000 rpm
Hydraulics	Load Sensing with Pilot Control
Main Hydraulic Pump	Axial Piston – Variable Displacement
Operating Flow (Max)	39.1 gpm
Operating Pressure (Max)	3,814 psi
Auxiliary Flow	31.7 gpm
Auxiliary Pressure	5,076 psi
Travel Motor	Axial Piston with Park Brake
Travel Pressure (Max)	3,814 psi
Travel Speeds (Max)	2.8/1.6 mph
Travel Effort (Max)	13,801 lbf
Gradability	30°
Swing Motor	Axial Piston with Swing Brake
Swing Pressure (Max)	3,814 psi
Swing Speed (Max)	10 rpm
Undercarriage	Belted Rubber Track
Track Shoe Width	1' 6"
Track Rollers	5 per side
Carrier Rollers	1 per side

WORKING SPECIFICATIONS

WORKING RANGE		STANDARD STICK
	Boom Length	12' 2"
	Stick (Arm) Length	6' 9"
A	Maximum Digging Height	24' 3"
B	Maximum Dumping Height	18'
C	Maximum Digging Depth	14' 7"
D	Maximum Vertical Wall Digging Depth	12' 7"
E	Maximum Reach at Ground Level	21' 4"
F	Minimum Swing Radius	6' 4"

DIGGING PERFORMANCE	STANDARD STICK
Boom Length	12' 2"
Stick (Arm) Length	6' 9"
Bucket Breakout Force (ISO)	11,916 lbf
Stick (Arm) Digging Force (ISO)	7,868 lbf

*Operating weight is for the SY75C with no attachments, and standard stick.

SANY America Inc. reserves the right to change these specifications at any time without prior notification. ©2026 SANY America Inc. HEXPS25SY75C001

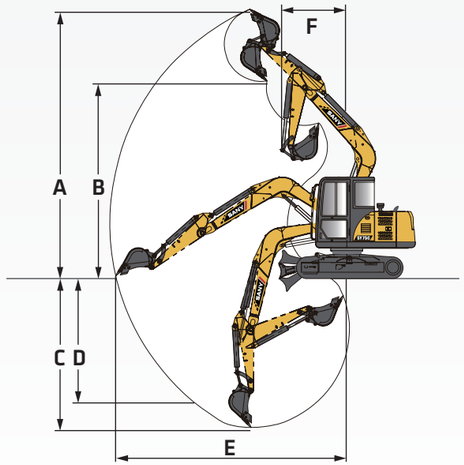

SMALL FIXED BOOM EXCAVATOR SY75C

STANDARD FEATURES

ENGINE
- Yanmar 4TNV98C
- Tier 4F / EU Stage V Ready
- Auto-idle and shutoff
- Dual-element dry air filter
- Engine air precleaner
- Coolant Expansion tank
- Electronic engine control
- Fan guard
- Engine coolant to –37 deg. C (–34 deg. F)
- Full-flow oil filter
- Turbocharger
- High flow cooling fan
- 500-hour engine-oil-change interval
- No scheduled DPF maintenance for 6,000 hours
- Fuel filter and water separator

HYDRAULIC SYSTEM
- Spring-applied, hydraulically released automatic swing brake
- Load sensing hydraulic system
- Control pattern change valve
- Primary auxiliary hydraulic circuit with 1 and 2-way combination piping
- Secondary auxiliary hydraulics circuit
- Auxiliary hydraulic-flow adjustments through monitor
- Adjustable auxiliary pressure relief
- Quick coupler plumbing

UNDERCARRIAGE
- Planetary drive with axial piston motors
- Propel motor shields
- Spring-applied, hydraulically released automatic propel brake
- Track guides, front idler and 2 per side
- 2-speed travel selection through display and on dozer lever
- 5 lower track rollers each side
- 1 upper carrier roller each side
- Dozer blade with cylinder guarding
- Tie downs on track frame and dozer blade
- 450mm (18") wide rubber tracks
- Undercarriage frame opening guard

UPPERSTRUCTURE
- Right-hand, left-hand, and counterweight mirrors
- Lockable cab, hood, and service doors
- Debris screen in side panel
- Remote-mounted engine oil and fuel filters
- Daily fluid level inspection visible from ground
- Rear reflectors

ATTACHMENTS
- Convenient grease points
- Dirt seals on all bucket pins

ATTACHMENTS
- Thumb bracket
- Oil-impregnated bushings
- Reinforced thrust plates

OPERATOR'S STATION
- Hydraulic pilot controls for boom, stick, swing, and travel operations
- Proportional auxiliary switches on joystick
- Travel levers with foot pedals
- AM/FM radio with Bluetooth®
- Cell phone tray
- Weight adjustable suspension cloth seat with adjustable armrests
- Retractable seatbelt
- Emergency stop switch
- Sliding front window
- Removable lower front window
- Window breaker
- ECO mode switch
- 8 tool selection modes
- Fully adjustable auxiliary flow circuits from display
- Multifunction LCD monitor with: Auto-shutoff indicator and setup, radio with Bluetooth, HVAC control, operator and owner master passwords and diagnostic capability / multiple-language
- System monitoring features: auto-idle indicator, 2-speed indicator, work-mode indicator, preheat icon, time and date, battery charge icon, throttle position, engine oil pressure alarm, DPF regeneration inhibit indicator, fuel level gauge, maintenance needed icon, failure code, standard/eco work mode icon, engine coolant temperature, coolant temp alarm, severe failure alarm, work tool mode icon, operating hours
- High performance heating, ventilation, and air conditioning system
- Operation and maintenance manual storage
- Heavy duty removable rubber floor mat
- Front windshield wiper with high and low speed
- Horn, electric
- Hour meter, electric
- Hydraulic shutoff lever, all controls
- Interior light and cup holder
- Operator E-panel
- Travel alarm with cancel switch
- Transparent overhead hatch with retractable sun shade

ELECTRICAL
- 12V electrical system
- Maintenance free battery
- Ground level battery disconnect
- Easy access fuse panel
- Terminal battery covers
- 80-amp alternator
- 12V power outlet

LIGHTS
- Work lights: 3 mounted on top of cab, 1 mounted on boom, magnetic beacon

In the interest of continual equipment development, SANY America Inc. reserves the right to change these specifications at any time without prior notification.
©2026 SANY America Inc. HEXPS26SY75C001

LIFTING PERFORMANCE

Standard 12' 2" Boom
Standard 6' 9" Stick
Standard 1' 6" Track Shoes
No Bucket

Ratings are based on ISO 10567:2007. Lift capacity does not exceed 75% of tipping load with the machine on firm, level ground or 87% of hydraulic lifting capacity.



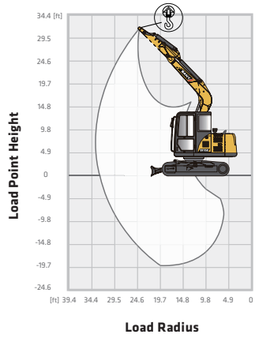

Blade Up

B (HEIGHT)	3.3 FT		9.8 FT		16.4 FT		MAX.	
LOAD POINT HEIGHT								
19.7 ft	–	–	3,053 lbs	3,053 lbs	–	–	2,668 lbs	2,668 lbs
16.4 ft	–	–	–	–	2,337 lbs	2,337 lbs	2,249 lbs	2,249 lbs
13.1 ft	–	–	2,899 lbs	2,899 lbs	2,888 lbs	2,701 lbs	2,094 lbs	2,094 lbs
9.8 ft	–	–	3,770 lbs	3,770 lbs	2,811 lbs	2,624 lbs	2,050 lbs	2,050 lbs
6.6 ft	–	–	5,016 lbs	5,016 lbs	2,723 lbs	2,546 lbs	2,094 lbs	2,094 lbs
3.3 ft	–	–	5,798 lbs	5,291 lbs	2,657 lbs	2,480 lbs	2,116 lbs	2,094 lbs
0 ft	–	–	5,600 lbs	5,104 lbs	2,635 lbs	2,488 lbs	2,315 lbs	2,161 lbs
-3.3 ft	4,641 lbs	4,641 lbs	5,512 lbs	5,016 lbs	–	–	2,535 lbs	2,359 lbs
-6.6 ft	7,529 lbs	7,529 lbs	5,534 lbs	5,027 lbs	–	–	3,020 lbs	2,811 lbs
-9.8 ft	–	–	5,280 lbs	5,159 lbs	–	–	4,156 lbs	4,012 lbs

Blade Down

B (HEIGHT)	3.3 FT		9.8 FT		16.4 FT		MAX.	
LOAD POINT HEIGHT								
19.7 ft	–	–	3,053 lbs	3,053 lbs	–	–	2,668 lbs	2,668 lbs
16.4 ft	–	–	–	–	–	–	2,249 lbs	2,249 lbs
13.1 ft	–	–	2,899 lbs	2,899 lbs	2,337 lbs	2,337 lbs	2,094 lbs	2,094 lbs
9.8 ft	–	–	3,770 lbs	3,770 lbs	3,219 lbs	2,701 lbs	2,050 lbs	2,050 lbs
6.6 ft	–	–	5,016 lbs	5,016 lbs	3,494 lbs	2,624 lbs	2,094 lbs	2,094 lbs
3.3 ft	–	–	6,151 lbs	5,291 lbs	3,781 lbs	2,546 lbs	2,116 lbs	2,094 lbs
0 ft	–	–	6,801 lbs	5,104 lbs	4,001 lbs	2,480 lbs	2,436 lbs	2,161 lbs
-3.3 ft	4,641 lbs	4,641 lbs	6,918 lbs	5,016 lbs	3,979 lbs	2,458 lbs	2,866 lbs	2,359 lbs
-6.6 ft	7,529 lbs	7,529 lbs	6,515 lbs	5,027 lbs	–	–	3,704 lbs	2,811 lbs
-9.8 ft	–	–	5,280 lbs	5,159 lbs	–	–	4,156 lbs	4,012 lbs

In the interest of continual equipment development, SANY America Inc. reserves the right to change these specifications at any time without prior notification.
©2026 SANY America Inc. HEXPS26SY75C001

sanyamerica.com ||| SY75C